QWB-12

WR-12

Features:
* Low VSWR
* High Isolation

Applications:
* Wireless
* Transmitter
* Laboratory Test
* Radar

Electrical

Frequency:	60.5~91.9GHz
VSWR:	1.15 max.

Mechanical

Interface:	WR-12 (BJ740)
Flange:	UG387/U (FUGP740)
Material:	Copper
Inner Coating:	Gold Plated

How To Order

QWB-12-U-W-X-Y-Z

U: Angle:
90 - 90°
W: H plane: H, E plane: E.
X: Material
Y: Flange type
Z: Serial number if diffent sizes

Bending Side:
H - H plane (Outline A)
E - E plane (Outline B)

Material naming rules:
C - Copper (Outline A, B)

Flange naming rules:
7 - UG-387/U (Outline A, B)

Serial number naming rules:
01 - (Outline A, B)

Examples:
To order a waveguide Bends, WR-12, 90°, H plane, Copper, UG-387/U, 30*30mm, specify QWB-12-90-H-C-7-01.

Customization is available upon request.

Outline Drawings

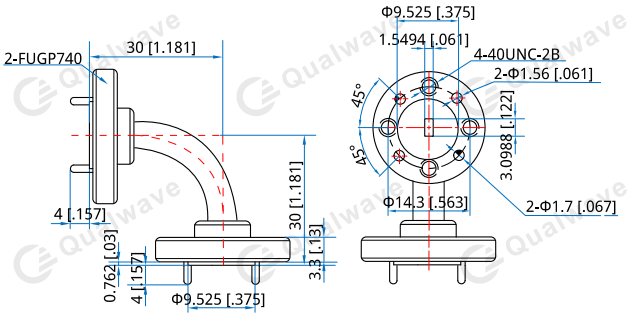

Outline A

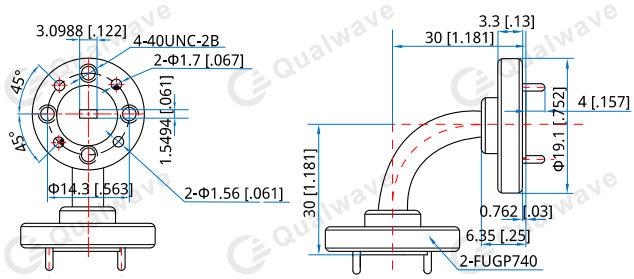

Outline B

Unit: mm [in]
Tolerance: ±0.2mm [±0.008in]