Qualwave

Diplexer/Duplexer

QMP2-20-8000-1

0.02GHz, 8GHz

Features:
* High Stopband Rejection
* Small Size

Applications:
* Telecom
* Laboratory Test
* Transceivers
* Instrumentation

Electrical

Channel 1 (L):	0.02~0.8GHz
Channel 2 (H):	0.93~8GHz
Passband Insertion Loss:	2dB max. @0.02~0.8GHz
	2.5dB max. @0.93~8GHz
Rejection (CH L):	45dB min.
	0.02~0.8GHz@0.95~8GHz
Rejection (CH H):	45dB min.
	0.93~8GHz@0.02~0.75GHz
VSWR:	2 max.
Power:	1W
Impedance:	50Ω

Mechanical

Size[*1]:	60*60*20mm
	2.362*2.362*0.787in
RF Connectors:	N Female
Mounting:	4-Φ3.5 through-hole

[1] Exclude connectors.

Environmental

Operating Temperature:	-40~+70°C

Outline Drawings

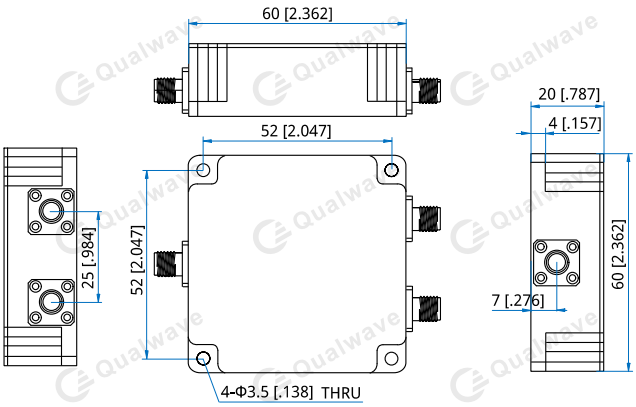

Unit: mm [in]
Tolerance: ±0.5mm [±0.02in]

How To Order

QMP2-20-8000-1

Customization is available upon request.