QFA061K5F

DC~6GHz, 1500W, Fan

Features:
* Low VSWR
* High Attenuation Flatness

Applications:
* Wireless
* Transmitter
* Laboratory Test
* Radar

Electrical

Frequency:	DC~6GHz
Attenuation:	30dB
Voltage:	220V
Impedance:	50Ω
Average Power*1:	1500W@25°C max.

[1] Derated linearly to 75W@120°C.

Mechanical

Size*2:	625.5*508*220mm
	24.626*20*8.661in
RF In Connectors:	7/16DIN, N
RF Out Connectors:	7/16DIN, N
Power Supply Connectors*3:	Three-phase plugs

[2] Exclude connectors.

[3] Matching standard power cord, can be customized.

Environmental

Temperature:	-55~+125°C

Outline Drawings

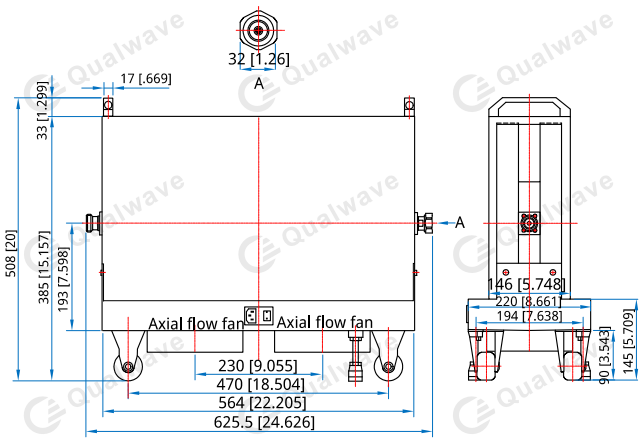

Outline A

Unit: mm [in]

Tolerance: ±2mm [±0.08in]

Attenuation Accuracy and VSWR

Frequency (GHz)	Attenuation Accuracy (±dB) vs. Attenuation (dB)				VSWR (max.)
	20	30	40	50	
DC~3	-	-	-	-	-
DC~6	-	3.5	-	-	1.35

How To Order

QFA061K5F-X-Y-Z

X: Frequency in GHz

Y: Attenuation in dB

Z: Connector type

Connector naming rules:

7 - 7/16DIN (Outline A)

N - N

Examples:

To order an attenuator, DC-6GHz, 7/16DIN male to 7/16DIN male, 30dB attenuation, specify QFA061K5F-6-30-77.