Qualwave

Balun

QBAL-500K-6000-1

0.5~6000MHz

Features:
* Broad Band
* Low Noise

Applications:
* Wireless
* Receiver
* Laboratory Test
* Radar

Electrical

Frequency:	0.5~6000MHz
Nominal Insertion Loss:	6dB typ.
Phase Shift:	180° typ.
Amplitude Balance:	±1.2dB max.
Phase Balance:	±10° max.
Common Mode Rejection:	20dB min.
Excess Insertion Loss:	2.5dB max.
Isolation:	8dB typ.
VSWR:	1.5 typ.
Impedance:	50Ω
Input Power:	1W max.
Risetime/Falltime:	17ps[2]

Mechanical

Size[*1]:	25*23*13mm
	0.984*0.906*0.512in
Connectors:	SMA Female
Mounting:	3-Φ2.7mm through hole

[1] Exclude connectors and terminations.

Outline Drawings

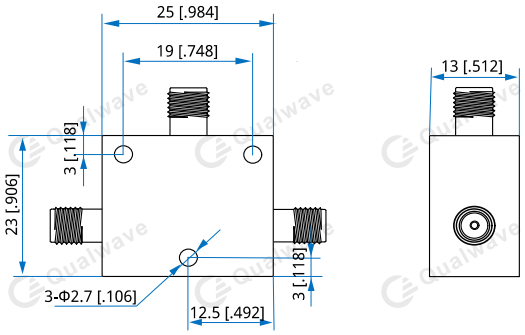

Unit: mm [in]
Tolerance: ±0.3mm [±0.012in]

How To Order

QBAL-500K-6000-1

Customization is available upon request.